RRI-PRN6M RIVET NUT SETTER

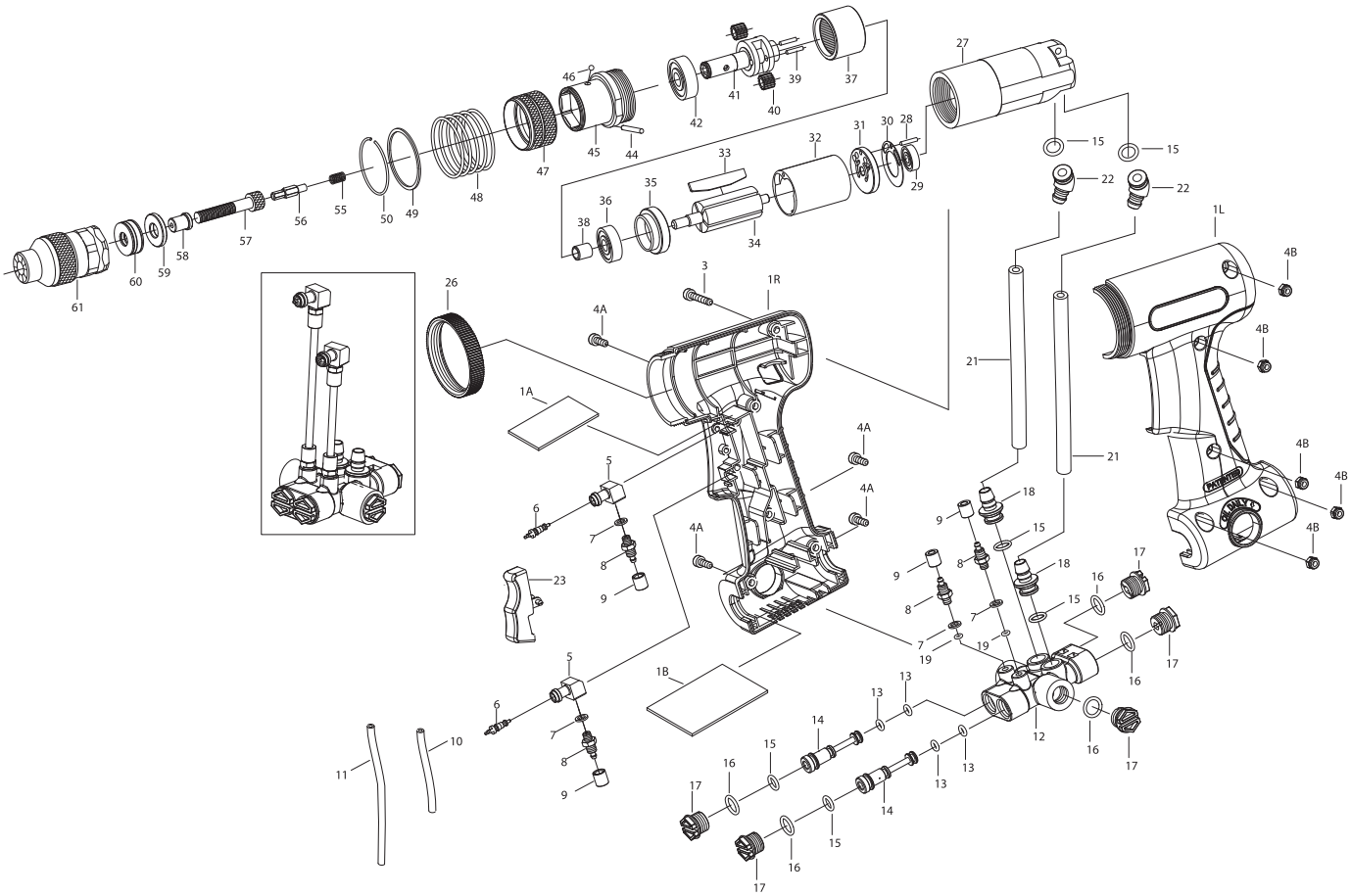

Index No.	Part No.	Description	Q'ty
1L	180101L-B	Housing-L	1
1R	180101R-B	Housing-R	1
1A	180704	Muffler material	1
1B	180714	Muffler material	1
3.	HC00407025	Screw	1
4A	HC00407013H	Screw	4
4B	NN004070B	Throttle lever nut	5
5.	107602	Valve Body	2
6.	107601	Bleeding Valve	2
7.	612714	Washer	4
8.	612717	Socket (Lower)	4
9.	612711	Cap	4
10.	180703S	2x4xL:48 Air Hose-S	1
11.	180703L	2x4xL:79 Air Hose-L	1
12.	461201	Valve	1
13.	OR0408	O-RING	4
14.	919202	Valve Steam	2
15.	OR0711	O-RING	6
16.	OR1014	O-RING	5
17.	107409	Inlet Plug	5
18.	180202	Hose Connector S	2
19.	OR0306	O-RING	2
21.	180702	6x8xL:130 Air Hose	2
22.	180201	Hose Connector Y	2
23.	461601	Butterfly Trigger	1
26.	180102	Lock Nut	1
27.	320101	Motor housing	1
28.	SP2514	Spring Pin	1

Index No.	Part No.	Description	Q'ty
29.	B20626	Ball Bearing	1
30.	302306	Motor Gasket	1
31.	320302	End Plate	1
32.	320301	Cylinder	1
33.	320305	Rotor Blade	6
34.	320304	Rotor	1
35.	106303	Front Plate	1
36.	B26902	Ball Bearing	1
37.	208501	Internal Gear	1
38.	HK0810	Needle Bearing	1
39.	RP4015	Pin	2
40.	320502	Planet Gear	2
41.	106506	Planet cage	1
42.	B26001	Ball Bearing	1
44.	RP2005	Pin	1
45.	208115	Q-Chang Clamp	1
46.	SB0039	(5/32") Steel Ball	1
47.	208117	Q-Chang Clamp	1
48.	208118	Spring	1
49.	208119	Washer	1
50.	RS3032	Ring	1
55.	208507	Spring	1
56.	106801	Hexagon Bit M6	1
57.	S061045	Bolt M6	1
58.	106802	Bushing #6	1
59.	106803	Washer	1
60.	T21024	Thrust Bearing NTB1024	1
61.	106814	Nut Anvil M6	1