NovaTork®

CALIBRATION ADAPTER - 1/2", 24+26 MM HEX
ZJ3-26

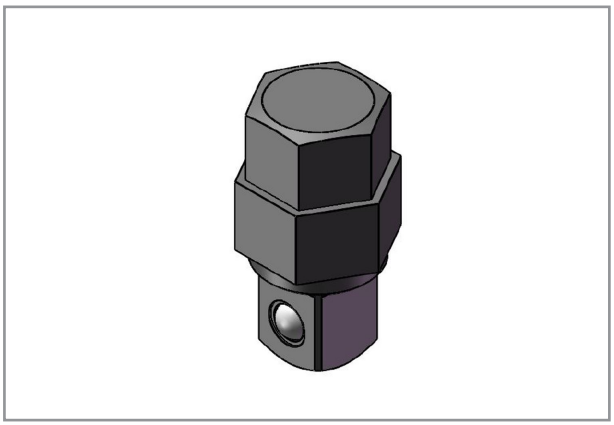

Specifications

Brand	**NovaTork**
Square Drive	**1/2"**
Hexagon	**24+26**
EAN	**8717981440191**