NovaTork®

CALIBRATION ADAPTER - 1/2", 17+18 MM HEX ZJ3-18

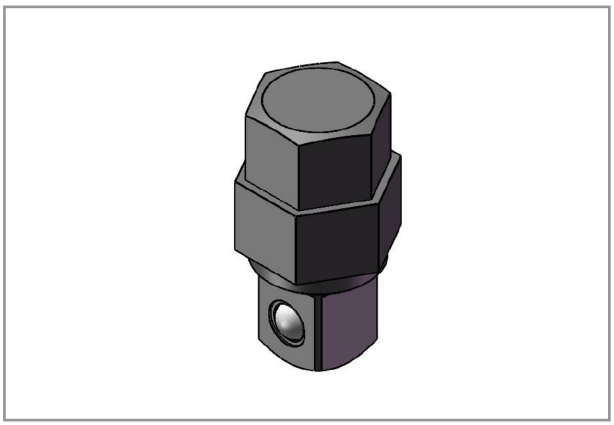

Specifications

Brand	**NovaTork**
Square Drive	**1/2"**
Hexagon	**17+18**
EAN	**8717981440160**