NovaTork®

CALIBRATION ADAPTER - 1/4", 12+13 MM HEX ZJ1-13

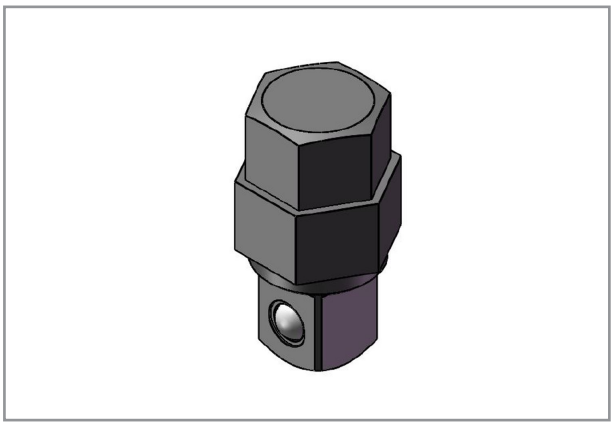

Specifications

Brand	**NovaTork**
Square Drive	**1/4"**
Hexagon	**12+13**
EAN	**8717981440092**