NovaTork®

CALIBRATION ADAPTER - 1/4", 6+7 MM HEX
ZJ1-7

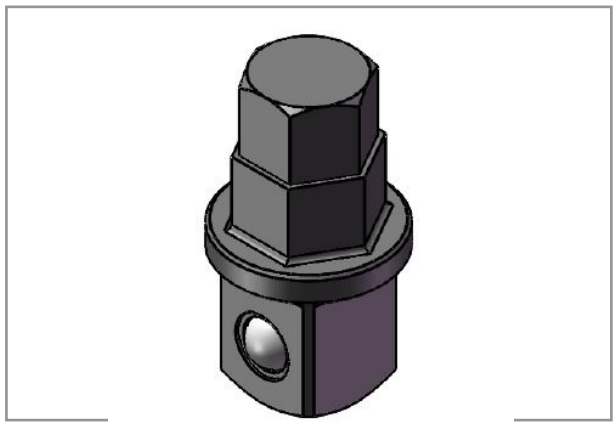

Specifications

Brand	**NovaTork**
Square Drive	**1/4"**
Hexagon	**6+7**
EAN	**8717981440061**