NovaTork®

CALIBRATION ADAPTER - 1/4", 8+9 MM HEX
ZJ1-9

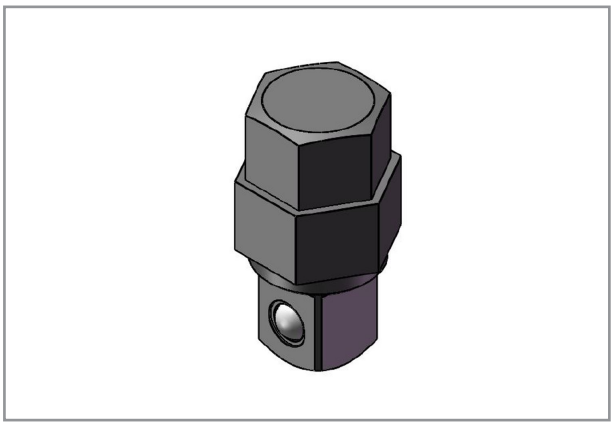

Specifications

Brand	**NovaTork**
Square Drive	**1/4"**
Hexagon	**8+9**
EAN	**8717981440078**