NovaTork®

CALIBRATION ADAPTER - 1/4", 10+11 MM HEX ZJ1-11

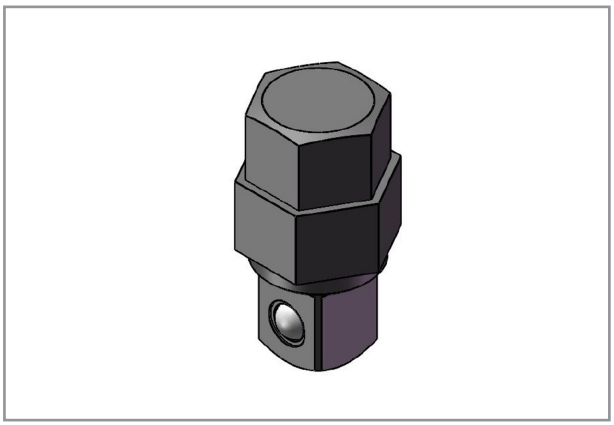

Specifications

Brand	**NovaTork**
Square Drive	**1/4"**
Hexagon	**10+11**
EAN	**8717981440085**