NovaTork®

CALIBRATION ADAPTER - 1/4", 3+4 MM HEX
ZJ1-4

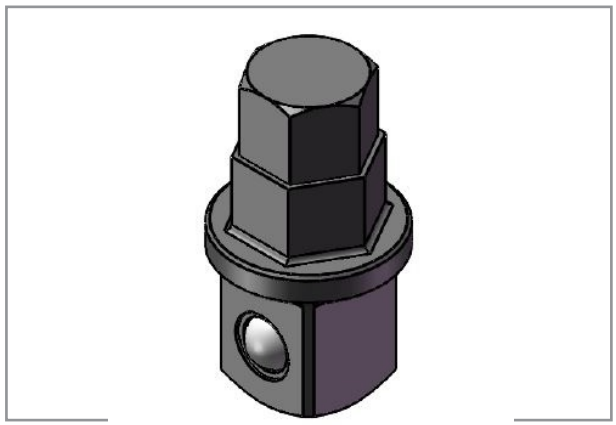

Specifications

Brand	**NovaTork**
Square Drive	**1/4"**
Hexagon	**3+4**
EAN	**8717981440047**