NovaTork®

CALIBRATION ADAPTER - 1/2", 19+21 MM HEX ZJ3-21

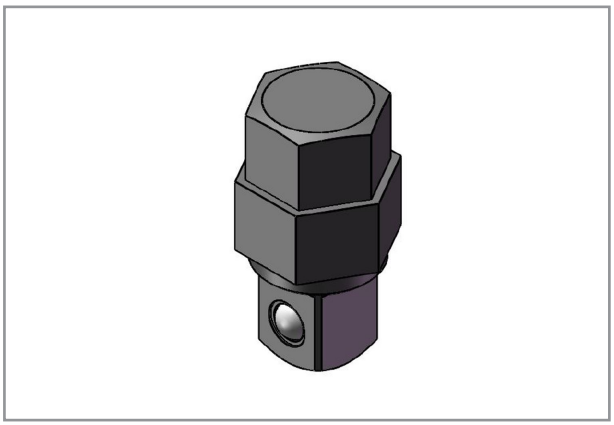

Specifications

Brand	**NovaTork**
Square Drive	**1/2"**
Hexagon	**19+21**
EAN	**8717981440177**