# **RRI-1031** IMPACT WRENCH

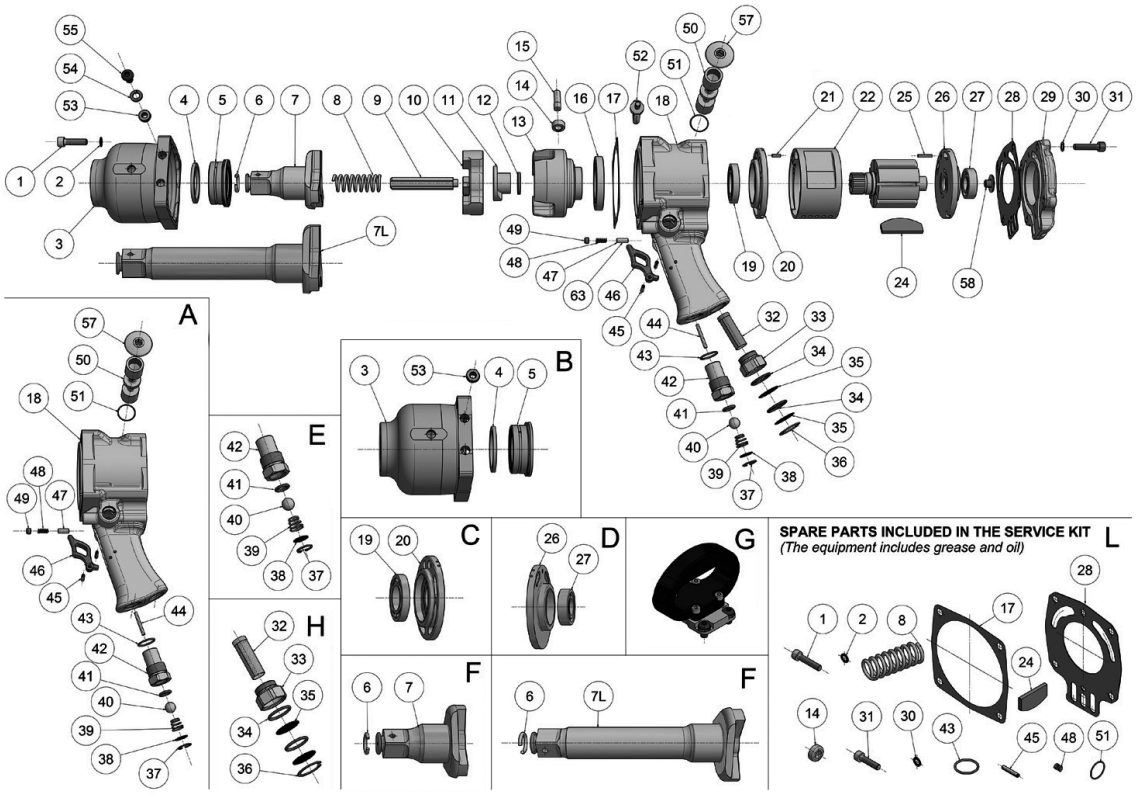


| Index No. | Part No. | Description | Q'ty |
|---|---|---|---|
| 1 | 1061-001-00 | Socket Head Cap Screw | 4 |
| 2 | 1061-046-00 | Lock Washer | 4 |
| 3 | 1031-003-00 | Blue Anodized Clutch Cover | 1 |
| 4 | 1031-004-00 | Retention Ring G45x55x4 | 1 |
| 5 | 1031-005-00 | Combined Bearing | 1 |
| 6 | 1031-006-00 | 1" Square Drive Ring | 1 |
| 7 | 1031-007-00 | 1" Square Drive Shaft | 1 |
| 7L | 1031-007-10 | 1" Square Drive Shaft - Long | 1 |
| 8 | 1031-008-00 | Clutch Spring | 1 |
| 9 | 1031-009-00 | Clutch Shaft | 1 |
| 10 | 1031-010-00 | Clutch Plate | 1 |
| 11 | 1031-011-00 | Cam, Clutch | 1 |
| 12 | 1031-012-00 | Washer | 1 |
| 13 | 1031-012-00 | Clutch Housing | 1 |
| 14 | 1061-015-00 | Roller | 1 |
| 15 | 1031-014-00 | Pin, Roller | 1 |
| 16 | 1031-015-00 | Ball Bearing | 1 |
| 17 | 1031-016-00 | Front Gasket | 1 |
| 17 | 1031-017-00 | Front Gasket | 1 |
| 18 | 1031-018-00 | Gun Body | 1 |
| 19 | 1031-019-00 | Ball Bearing | 1 |
| 20 | 1031-020-00 | Front End Plate | 1 |
| 21 | 1060-042-00 | Roller | 1 |
| 22 | 1031-022-00 | Main Motor Housing | 1 |
| 23 | 1031-023-00 | Rotor | 1 |
| 24 | 1031-024-00 | Motor Vane | 8 |
| 25 | 1060-040-00 | Roller 4X19,8 mm. | 1 |
| 26 | 1031-026-00 | Rear End Plate | 1 |
| 27 | 1061-033-00 | Ball Bearing | 1 |
| 28 | 1061-034-00 | Rear Gasket | 1 |
| 29 | 1031-029-00 | Motor Cover | 1 |
| 30 | 1061-002-00 | Lock Washer | 4 |
| 31 | 1061-047-00 | Socket Head Cap Screw, Clutch Cover | 4 |
| 32 | 1031-032-00 | Air Filter | 1 |
| 33 | 1031-033-00 | Silencer Body | 1 |
| 34 | 1061-049-00 | O-Ring | 2 |

| Index No. | Part No. | Description | Q'ty |
|---|---|---|---|
| 35 | 1061-050-00 | Air Filter | 2 |
| 36 | 1061-051-00 | Seeger Ring For Bore | 1 |
| 37 | 1061-045-00 | Seeger Ring For Bore | 1 |
| 38 | 1060-031-00 | Air Filter | 1 |
| 39 | 1061-043-00 | Valve Spring | 1 |
| 40 | 1061-042-00 | Steel Ball | 1 |
| 41 | 1061-041-00 | O-Ring | 1 |
| 42 | 1031-042-00 | Reducer, Air Inlet | 1 |
| 43 | 1061-039-00 | O-Ring | 1 |
| 44 | 1031-044-00 | Valve Pin | 1 |
| 45 | 1061-037-00 | Pivot Pin, Trigger (Long) | 2 |
| 46 | 1061-036-00 | Trigger | 1 |
| 47 | 1061-022-00 | Pin, Rotation Reverser | 1 |
| 48 | 1061-023-00 | Spring, Rotation Reverser | 1 |
| 49 | 1061-024-00 | Set Screw, Rotation Reverser | 1 |
| 50 | 1031-050-00 | Rotation Reverser Shaft | 2 |
| 51 | 1031-051-00 | O-Ring | 1 |
| 52 | 1061-052-00 | Lifting Eye Bolt | 3 |
| 53 | 1031-053-00 | Spacer | 3 |
| 54 | 1061-055-00 | Spring Lock Washer | 3 |
| 55 | 1061-056-00 | Hex Cap Screw | 1 |
| 56 | 1031-056-00 | Round Handle | 1 |
| 57 | 1061-057-00 | Fast Reverse System | 2 |
| 58 | 1061-058-00 | Axial Retention Screw | 1 |
| 63 | 1031-063-00 | Pin, Rotation Reverser | 1 |
| A | 1031-064-99 | Whole Gun Body | 1 |
| B | 1031-066-99 | Blue Anodized Whole Hammer Case | 1 |
| C | 1031-067-99 | Front Motor Housing Complete | 1 |
| D | 1031-068-99 | Rear Plate Complete | 1 |
| E | 1031-069-99 | Air Inlet Valve | 1 |
| F | 1031-070-99 | 1" Square Drive Shaft | 1 |
| F | 1031-071-99 | 1" Square Drive Shaft-Long | 1 |
| G | 1031-072-99 | Round Side Handle Complete | 1 |
| H | 1031-073-99 | Silencer | 1 |
| L | 1031-074-99 | Service Kit | 1 |